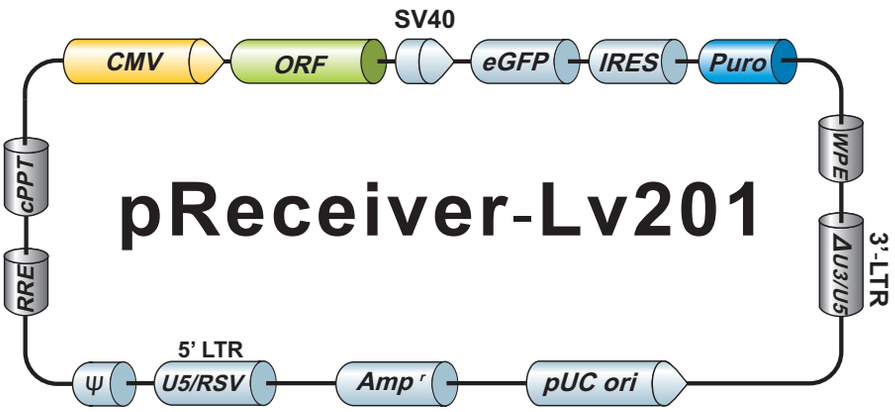

Copyright© 2011 GeneCopoeia, Inc. All Rights Reserved.