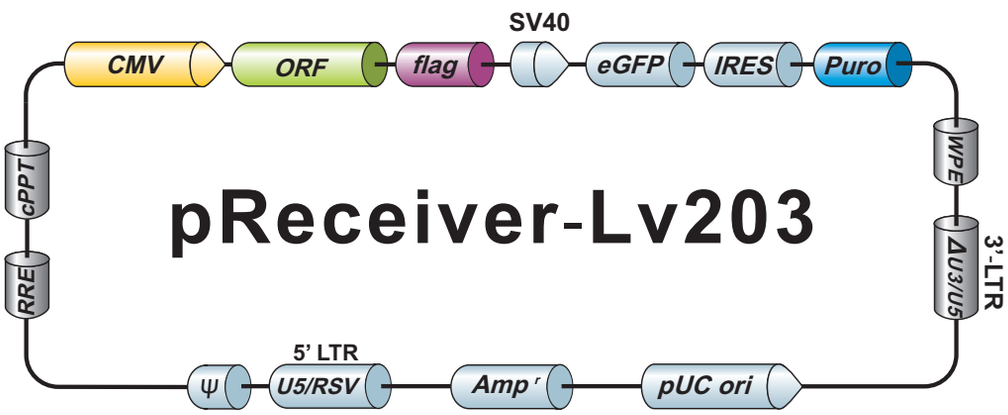

Copyright© 2012 GeneCopoeia, Inc. All Rights Reserved.